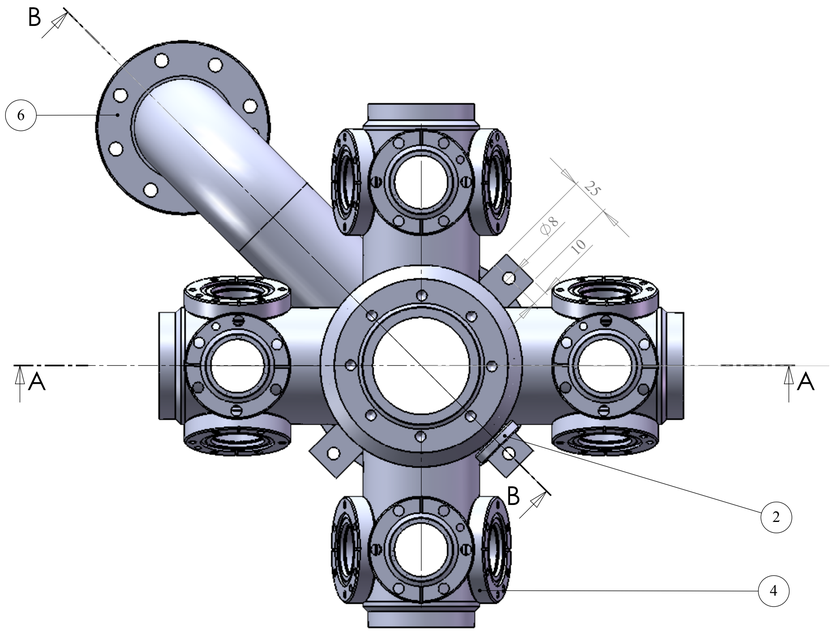

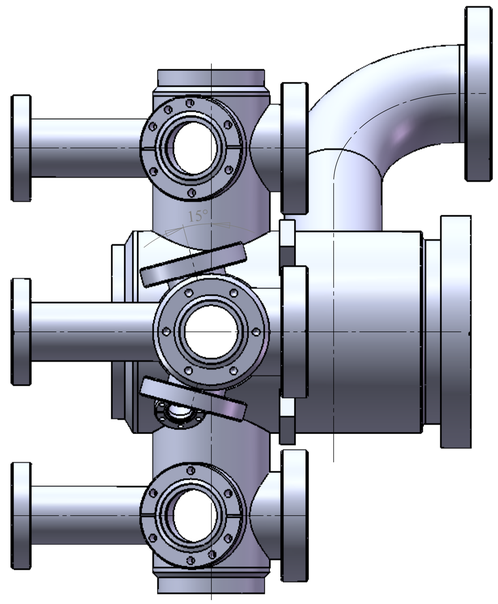

B-B

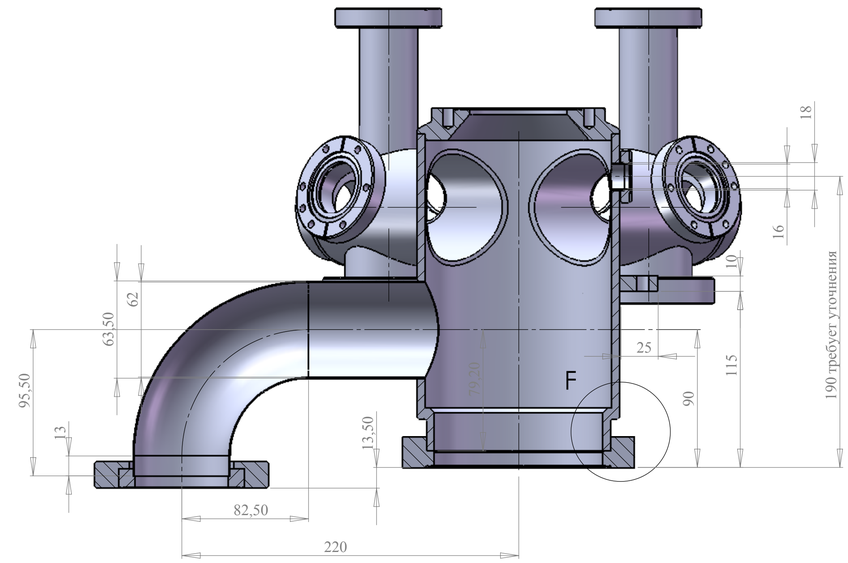

A-A

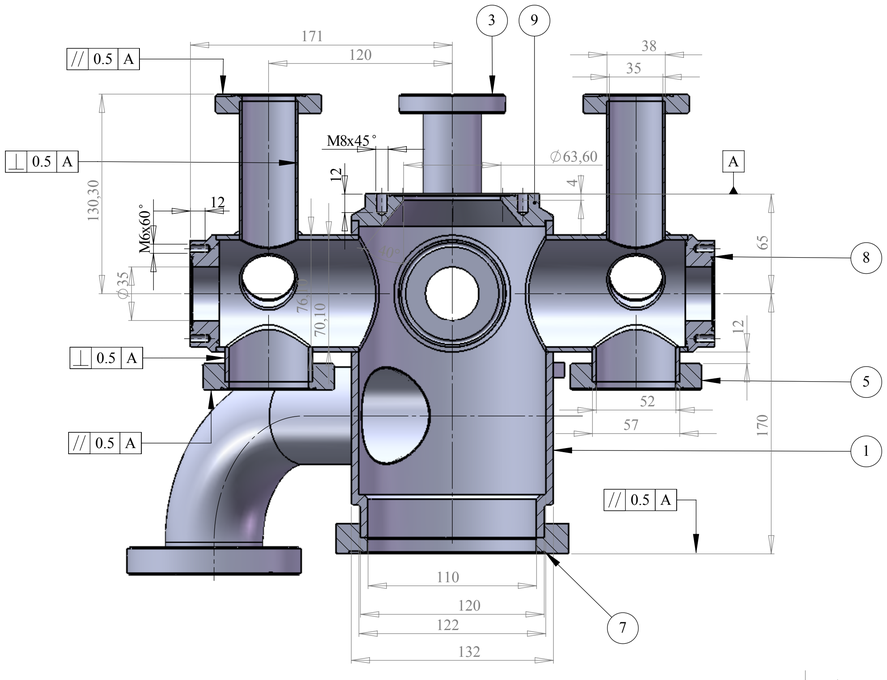

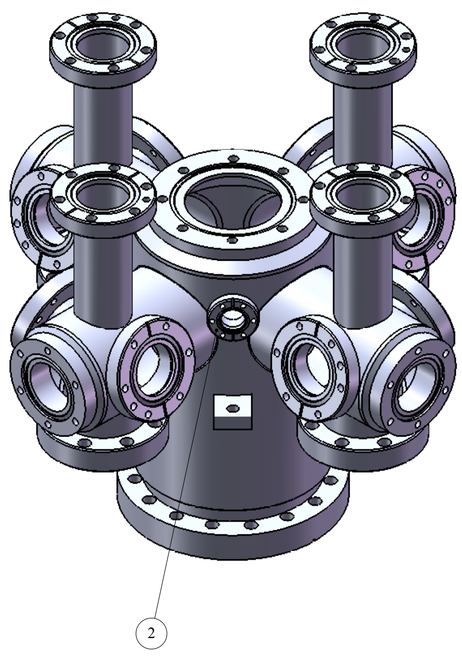

F (1 : 1)

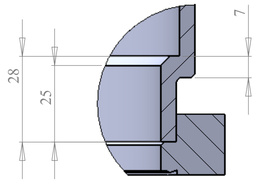

Pos.	Name	Descr.	Quantity
1	Chamber		1
2	CF 1.33 non rot	M4	1
3	CF 2.75 non rot		4
4	CF 2.75 non rot	M6	8
5	CF 3.37 non rot	316L	4
6	CF 4.5 rot		1
7	NW100CF non rot	316L	1
8	CF 2.75 non rot	M6	4
9	CF 4.5 non rot	M8	1

Helium inleak less than 2x10-10 ST.CC/Sec

UNLESS OTHERWISE SPECIFIED:
DIMENSIONS ARE IN MILLIMETERS
SURFACE FINISH:
TOLERANCES:
LINEAR:
ANGULAR:

FINISH:

DEBUR AND BREAK SHARP EDGES

DO NOT SCALE DRAWING

REVISION

	NAME	SIGNATURE	DATE
DRAWN			
CHK'D			
APPV'D			
MFG			
Q.A			

TITLE:

MATERIAL:

WEIGHT:

DWG NO. камера с фланцами - 2

SCALE:1:2

SHEET 1 OF 1